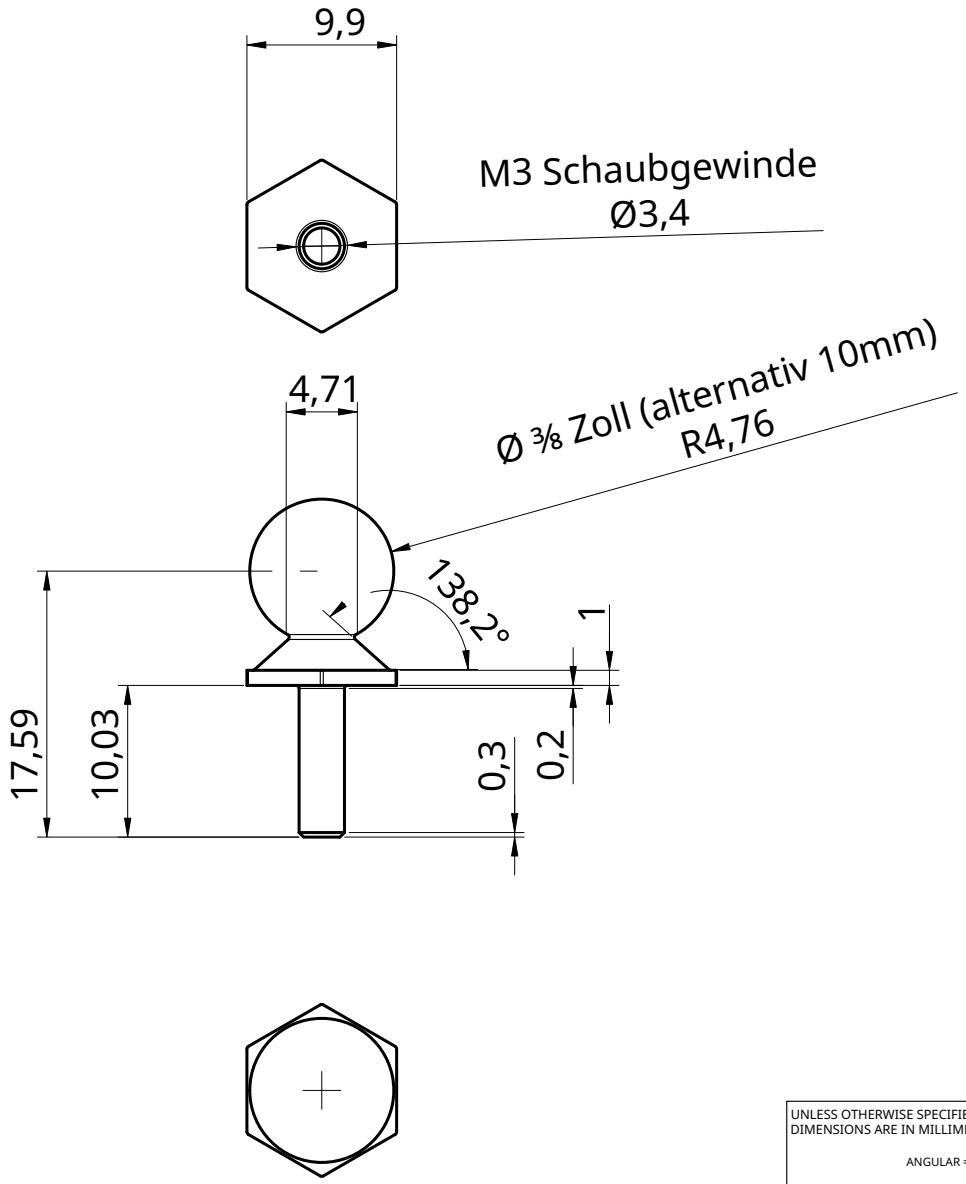

UNLESS OTHERWISE SPECIFIED, DIMENSIONS ARE IN MILLIMETERS ANGULAR = ± ° SURFACE FINISH		NAME	SIGNATURE	DATE
	DRAWN	Konrad		2022-04-05
	CHECKED			
	APPROVED			
DO NOT SCALE DRAWING				
BREAK ALL SHARP EDGES AND REMOVE BURRS				
FIRST ANGLE PROJECTION	MATERIAL Stah -l Stark Ferromagnetisch		FINISH Vernickelt Verchromt	

TITLE
Ball Joint
$\frac{3}{8}$ Zoll Flansch

SIZE	DWG NO.	REV.
A4		

SCALE	WEIGHT	SHEET
2:1		1 of 1